Inter-VLAN Routing & DHCP

Course Code: CSC 3116 Course Title: Computer Networks

Dept. of Computer Science
Faculty of Science and Technology

Lecturer No:	Lab 10	**Week No:**		**Semester:**	Summer 22-23
Lecturer:	*Sharifa Rania Mahmud; rania@aiub.edu*				

Lecture Outline

1. Inter-VLAN Routing
2. DHCP configuration

Inter-VLAN Routing

How can we enable PC0 of VLAN 10 to communicate PC1 of VLAN 20?

Using Router

1. Multiple access line between R1 and SW1; one for each VLAN
2. One trunk interface between SW1 and R1, with multiple subinterfaces. ROAS technique
3. Using Layer 3 switch with switch virtual interface

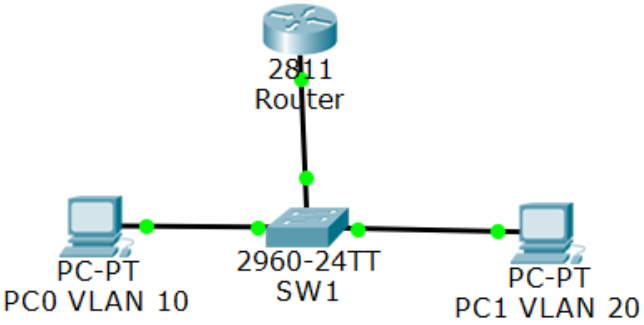

Inter-VLAN Routing….

- Configure the switch to create VLANs & interfaces to each VLAN
- Configure Fa0/3 interface of the switch as a trunk

```
Switchport(config)#interface fa0/3
Switch(config-if)#switchport mode trunk
```

- Configure the Router
  - Select the Fa0/0 interface of the router

    `interface fa0/0`
  - Activate the interface

    `no shutdown`
  - Create a virtual subinterface

    `interface fa0/0.10`

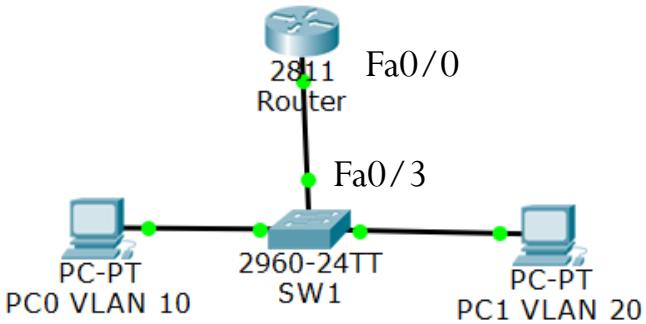

Inter-VLAN Routing….

- Specify the trunking protocol & VLAN

  encapsulation dot1q 10

- Assign an IP address to the subinterface (default gateway of the VLAN)

  `ip address 192.168.10.254 255.255.255.0`

- Create another virtual subinterface for VLAN 20

  interface fa0/0.20

  - Specify the trunking protocol & VLAN

    encapsulation dot1q 20

  - Assign an IP address to the subinterface (default gateway of the VLAN)

    ip address 192.168.20.254 255.255.255.0

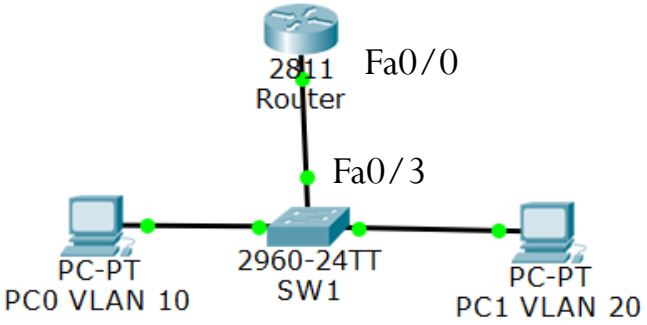

DHCP

- DHCP server
  - Router
  - Computer

- DHCP server configuration:

Scenario I: DHCP server located in LAN

Scenario II: DHCP server located in different network

DHCP....

Scenario I: DHCP server located in LAN

1. Configure the interface by which DHCP server is connected to the LAN

```
int fa0/0
ip address 192.168.1.254 255.255.255.0
```

2. Create a DHCP pool and give its name

```
ip dhcp pool  mypool
```

3. Define the network IP address so that IP address from that block can be allocated

```
network  192.168.1.0      255.255.255.0
```

4. Define the DNS server's IP address (optional)

```
dns-server 172.168.1.150
```

5. Define the default gateway (optional)

```
default-router 192.168.1.254
```

6. Specify the range of address not to be leased out to the client (optional)

```
ip dhcp excluded-address   192.168.1.1   192.168.1.10
```

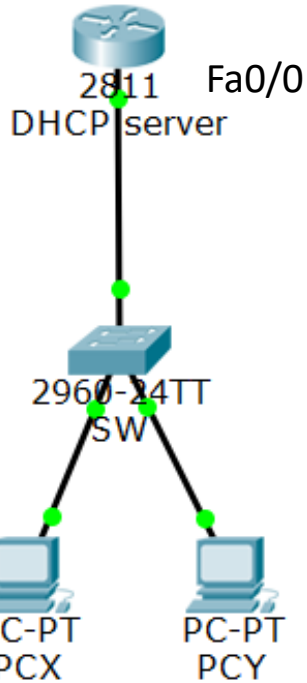

Network: 192.168.1.0

Mask: 255.255.255.0

DHCP....

DHCP server is in different network.

.

Configure the DHCP server as before

```
ip dhcp pool mypool
network  192.168.1.0    255.255.255.0
dns-server 192.16.1.150 (suppose)
default-router 192.168.1.254
ip dhcp excluded-address 192.168.1.1 192.168.1.10
```

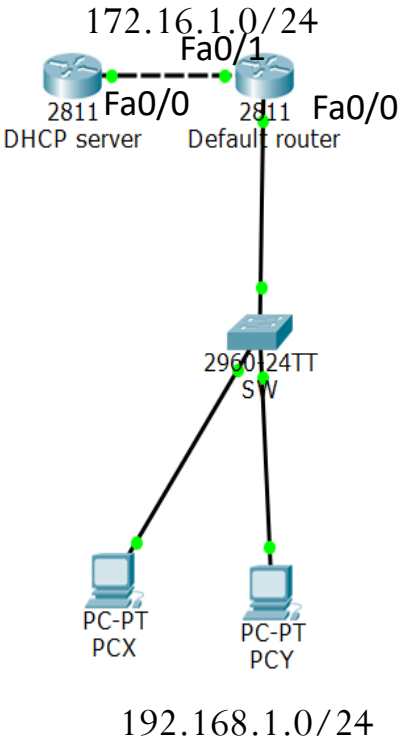

DHCP….

DHCP server is in different network….

- Configure the interfaces of the DHCP server and default router
- Configure the Fa0/0 interface of the default router with

```
interface fa0/0
ip address 192.168.1.254 255.255.255.0
no shutdown
```

- Configure each router to perform routing using any protocol, RIPv2 or EIGRP or OSPF

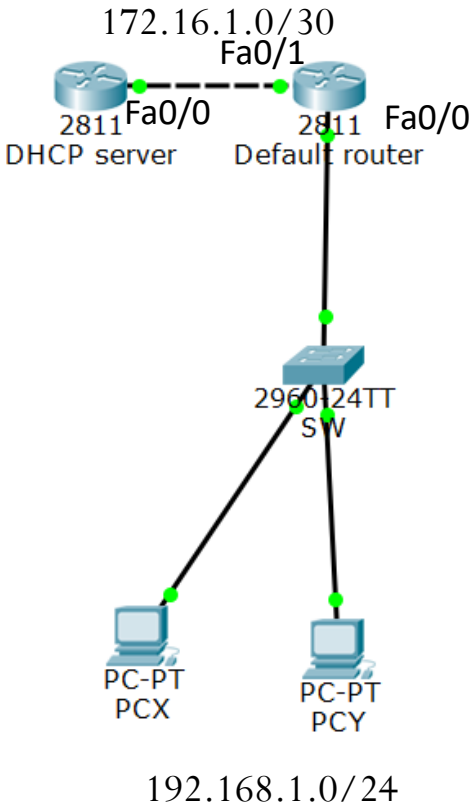

DHCP….

DHCP server is in different network….

What will happen if PCX sends s DCHP broadcast to 255.255.255.255 address?

It will be blocked by the default router.

Why?

Router divide the broadcast domain.

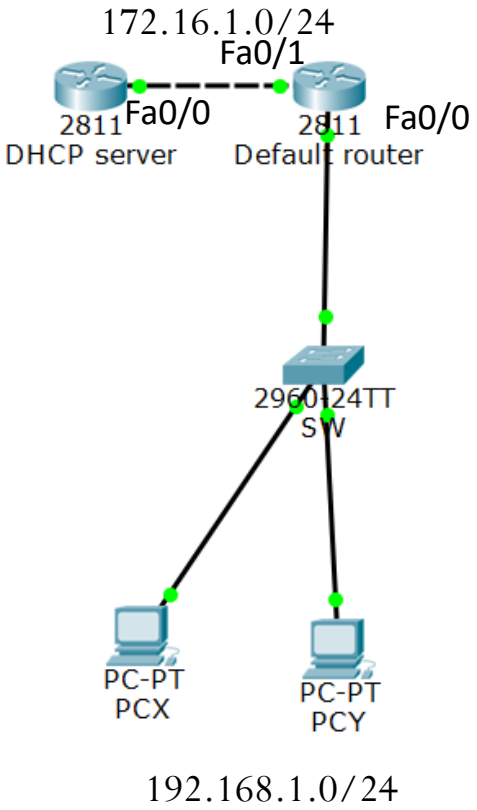

DHCP….

DHCP server is in different network….

How can the PCX be enabled to reach to DHCP server?

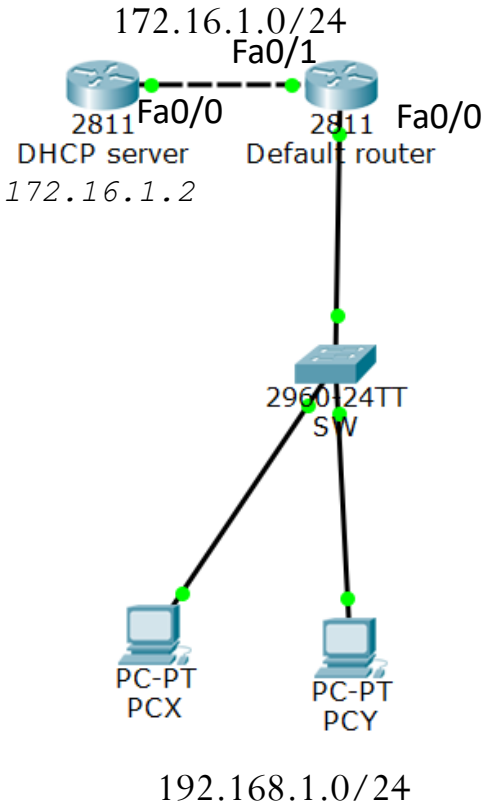

In addition to the configuration of Fa0/0 interface of the default router (as done before), configure this interface with the helper-address

```
interface fa0/0
ip helper-address 172.16.1.2
```

Address of the DHCP server

DHCP….

DHCP server is in different network….

IP

0	4	8	16	19	31Bits
4	IHL	DSCP: 0x0	TL: 77		
ID: 0x14			0x0	0x0	
TTL: 128		PRO: 0x11	CHKSUM		
SRC IP: 0.0.0.0					
DST IP: 255.255.255.255					
OPT: 0x0				0x0	
DATA (VARIABLE LENGTH)					

Incoming PDU at default router from PCX

IP

0	4	8	16	19	31Bit
4	IHL	DSCP: 0x0	TL: 77		
ID: 0x14			0x0	0x0	
TTL: 128		PRO: 0x11	CHKSUM		
SRC IP: 192.168.1.254					
DST IP: 172.16.1.2					
OPT: 0x0				0x0	
DATA (VARIABLE LENGTH)					

Outgoing PDU from default router to DHCP

DHCP….

DHCP server is in different network….

IP

0	4	8	16	19	31Bits
4	IHL	DSCP: 0x0	TL: 81		
ID: 0x1c			0x0	0x0	
TTL: 255		PRO: 0x11	CHKSUM		
SRC IP: 172.16.1.2					
DST IP: 192.168.1.254					
OPT: 0x0				0x0	
DATA (VARIABLE LENGTH)					

Incoming PDU at default router from DHCP

IP

0	4	8	16	19	31Bits
4	IHL	DSCP: 0x0	TL: 81		
ID: 0x1c			0x0	0x0	
TTL: 255		PRO: 0x11	CHKSUM		
SRC IP: 192.168.1.254					
DST IP: 255.255.255.255					
OPT: 0x0				0x0	
DATA (VARIABLE LENGTH)					

Outgoing PDU from default router to PCX

DHCP....

Verifying configuration

Router#**show ip dhcp binding**	Displays a list of all bindings created
Router#**show ip dhcp binding** *w.x.y.z*	Displays the bindings for a specific DHCP client with an IP address of *w.x.y.z*
Router#**clear ip dhcp binding** *a.b.c.d*	Clears an automatic address binding from the DHCP server database
Router#**clear ip dhcp binding ***	Clears all automatic DHCP bindings

References

[1] S. Empson, *CCNA Portable Command Guide*, 2nd ed., Cisco Systems, Inc., 2008, USA.

Recommended Books

1. **Official Cert Guide CCNA 200-301 , vol. 1**, *W. Odom*, Cisco Press, First Edition, 2019, USA.
2. **CCNA Routing and Switching**, *T. Lammle*, John Wily & Sons, Second Edition, 2016, USA.